Technical Manual
CoolGen 4

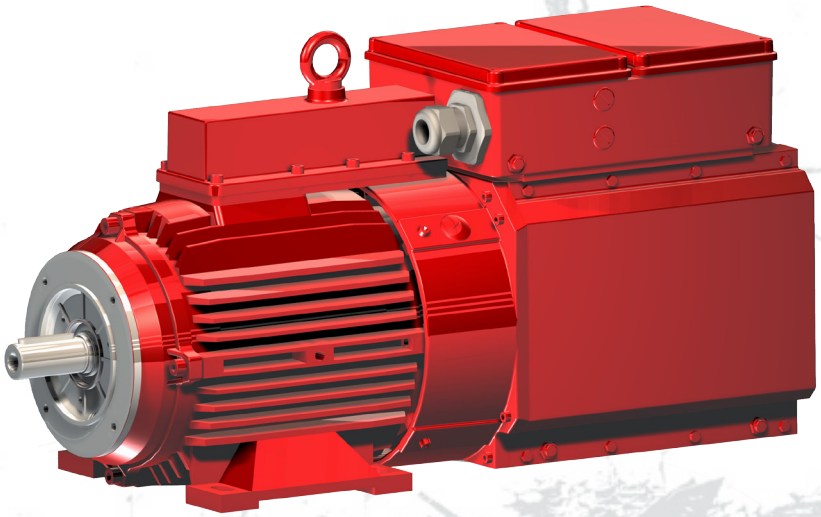

MOZELT MAGNET SYSTEMS
www.mozelt.com

Please observe the following safety information and recommendations before start-up !

Safety information / General information

WARNING

All passages provided with the „warning“ sign in the manual contain information important for avoiding danger!

CAUTION

All passages provided with the „caution“ sign in the manual contain information necessary for avoiding damage to the power supply or accessories!

WARNING

**It is absolutely necessary to observe the following warnings.
If these warnings are not observed, serious personal injuries with fatal result, severe injuries to health or considerable damage to property cannot be ruled out!**

1. General

During use the generator may have live, bare, if applicable, also hot surfaces. In the case of inadmissible removal of the required cover, inappropriate use, wrong installation or operation, there is the risk of death or severe injury or material damage.

All work concerning the transport, installation and start-up as well as maintenance are to be carried out by qualified technical personnel (IEC 364 and/or CENELEC HD 384 or DIN VDE 0100 and IEC Report 664 or DIN VDE 0110 and national regulation for accident prevention or VGB 4 are to be observed).
Qualified technical personnel according to these basic safety references are persons who are familiar with the installation, assembly, start-up and operation of the product and possess corresponding qualifications for their activity (defined in IEC 364 or DIN VDE 0105).

For reasons of safety and the preservation of documented system data and functions, repairs to the generator or its components may only be undertaken by the manufacturer.

Technical data, as well as data concerning connection conditions, are to be taken from the rating plate and the documentation and are to be strictly observed.

2. Usage to the Intended Purpose

Synchronous generators with integrated electronics are components for installation in machines which are used in industrial plants.

Start-up of the power generators is not allowed before it has been verified that the machine in which the generators are installed conforms to the Machinery Directive.

The generators conform to the protection goals of the low-voltage directive.
Operation is only allowed when the EMC Directive is adhered to.

The technical data and information about connection conditions are given in the nameplate and documentation and shall be adhered to by all means.

3. Transport, Storage

The instructions for transport, storage and proper handling are to be observed.

Defects detected after delivery shall be reported immediately to the carrier. Before start-up, the supplier is to be notified, if necessary.

4. Installation

The installation and cooling of the devices must be carried out according to the provisions of the respective documentation.

The generators are to be protected against inadmissible loads. They are only to be touched in such a way that no components are bent and/or insulation clearances are changed. Avoid touching the electronic elements and contacts.

English

5. Electrical Connection

When working on energized power generators, the applicable national accident prevention regulations shall be observed.

WARNING

In the electronics, there are intermediate circuit capacitors.
Their discharge may take longer than 10 minutes!
Before start of work, verify isolation from power supply!
If this is not observed, serious personal injuries with fatal result, severe injuries to health or considerable damage to property cannot be ruled out!

The electrical installation is to be carried out in accordance with the relevant regulations (e.g. line cross sections, provision of safety arrangements). Further instructions are given in the documentation.

The manufacturer of the system is responsible for adherence to the EMC legislature. Instructions for installation in accordance with the EMC Directive are given in the documentation of the power generators.

6. Operation

Installations into which the generators are built must be equipped, if necessary, with additional monitoring and protection devices.
The manufacturer's documentation is to be observed.

After separating the generators from the drive unit, live components and line connections must not be touched when the generator spindle is running, due to the voltage.

All covers are to be kept closed during operation.

7. Applicable Documents

WARNING

A prerequisite for the use of a power generator is that these operating instructions have been read and understood. In particular, the safety notes contained there are to be observed.

If these notes are not observed, serious personal injuries with fatal result, severe injuries to health or considerable damage to property cannot be ruled out!

English

English

Table of contents

1. Technical description 5
1.1 General information 5
1.2 Range of Application 5
1.3 Description 5
1.4 Function mode 5
1.5 Protection Concept, Behaviour in the Case of Faults 6
1.6 Safety regulations magnet operation 6

2. Technical Data 7
2.1 Performance Data 7
2.2 Accessories 7
2.2.1 MFD display 7
2.3 Generator Drives 8
2.3.1 Belt Drives 8
2.3.2 Hydraulic Drives 8

3. Assembling 9
3.1 Assembling instructions 9
3.2 Installation of „BELL CLUTCH“ Coupling 9
3.3 EMC Notes Electromagnetic Compatibility 10
3.3.1 Interference Immunity 10
3.3.2 Interference Radiation 10
3.4 Magnet Connection 10
3.5 LED Functions 10
3.6 Control cable 11
3.7 Terminal Box 11
3.8 Terminal Block 12
3.8.1 Start command via switch line on the MFD display 12
3.8.2 Start Command via Terminal Block 12
3.9 USB Connection 12
3.10 Cable Allocation 230 Volt 13
3.11 Dimensional Drawings Power Generator 14

4. Commissioning 15
4.1 Safety Notes 15
4.2 Operating instructions 16
4.3 Operational indicators MFD 17
4.4 Fault indicators MFD 19
4.5 Assembly Plan Power Generator 22
4.6 Mechanical Speed Measurement 23

5. Shutdown 23

1. Technical description

1.1 General information

MOZELT does not take any liability for the consequences resulting from inappropriate, negligent or incorrect installation or operation of the synchronous generator with integrated electronics.

The conditions of guarantee of MOZELT in the valid version at the time of purchase shall apply for the equipment.

The content of the present manual is considered correct at the time of printing for the indicated generator version. MOZELT reserves the right to make changes which represent a technical advantage.

Any change to the generators which is not performed by us, including the installation of additional devices, can lead to a change of the technical specification and the content of the documentation and manual and therefore leads to an exclusion of our liability, also from the guarantee.

CAUTION

Important!
The electronic modules are equipped with electrostatically sensitive CMOS and MOS components.

It is absolutely necessary to observe the following instructions since otherwise these switching circuits can be destroyed.

- For servicing work, first equipotential bonding (static charging) is to be ensured between electronic modules, tools, measuring devices and personnel.
- Grasp electronic modules by the edges only, do not touch components and their connections.

1.2 Range of Application

The MOZELT power supply system with synchronous generator is designed to supply and activate load lifting magnets on mobile excavators.
At present it is available with the output sizes 13, 20 and 30 kW.
Due to the duty rating of 100% (ED), the generators are the optimal solution for loading and handling in the industrial scrap metal industry.
The maintenance-free and compactly designed generator system is powered by the diesel engine of the excavator or the hydraulic system.

1.3 Description

CAUTION

The rated speed of a generator of the CG 4-series is around 3000 rpm*.

CAUTION

In this connection, the range from 2700 rpm to 3400 rpm is to be regarded as the tolerance range.

CAUTION

It is particularly important that the rotational speed remains constant and no fluctuations occur!

The most important operating and switching states are indicated in a multi-function display (MFD) in the operator‘s cab.

1.4 Function mode

The transformation of brushless three-phase voltage into DC voltage in the generator and its contactless delivery after activating the generator provides the operator with comfort and the highest safety.

The generator CG 4 is practically maintenance-free. The abolition of contactors or relay circuits in the external electrical plant area, as well as the absence of adjustment buttons or potentiometers, protects this installation system against faulty operation.

* rpm = revolutions per minute

English

The generator CG 4 is independent of the on-board electrical system, and produces its own supply voltage for internal control and monitoring. The machine is overload and short-circuit proof.

The correct supply voltage is regulated automatically for the magnet attached to the generator and the necessary release time is optimized and implemented for every kind of material to be loaded.

The operator can read off important operating conditions from the function display (MFD) in the operator's cab.
The display of the relative duty rating in % (ED) is to be observed for the range 50% to 100% of the attached load lifting magnet. If this exceeds the value 80% ED, the danger of the magnet overheating is signalized by a red LED.
It is then recommended to change the work mode or to take a break to allow the magnet to cool down.

The localization of work related errors in the 230 V cable system is directly possible. Cable damage and shortcircuits in the 230 V cable system lead to immediate disconnection of the supply voltage (passive protection for individuals).

1.5 Protection Concept, Behaviour in the Case of Faults

The intrinsic safety of the power generator is enhanced by an extension of the monitoring functions, Installed monitors ensure a high operational reliability of the system.
In case of fault, the electronics is immediately blocked. At the same time, a fault is indicated and the LED „Ready for operation" extinguishes.

The following monitoring functions are integrated:

- Overload protection
- Insulation monitoring
- Overtemperature protection
- Overspeed protection
- Open magnetic circuit
- Short circuit

1.6 Safety regulations magnet operation

The operation of a load lifting magnet on a mobile excavator represents a special mode of operation and an increased safety risk. In contrast to working with a hydraulic grabber, the magnet picks up all available ferromagnetic material immediately after it is switched on.

This may even be more than the load-carrying capacity of the mobile excavator allows.

Similarly, the magnet suddenly releases the lifted material after it is switched off, if there is cable damage or a short-circuit in the magnet feed cable. This can lead to dangerous situations in the working vicinity, for example, if falling material causes other objects to be hurled up by lever force. Furthermore, it is not excluded that pieces of scrap iron may separate from the magnet during a swiveling procedure, if these are located at the lower end of the lifted material cluster.

For these reasons, it is particularly important to observe the following principle:

While working with the load lifting magnet it is forbidden to stand within the extended reach of the excavator

Do not swivel the working equipment or change the location of the excavator with the magnets switched on without a payload - unintentionally lifted materials can lead to human injury by lever force!

The magnet can oscillate strongly after load release!

For this reason, the mechanically safe attachment of the magnet in the form of a special magnet suspension at the end of the arm on the mobile excavator is highly recommended!

English

2. Technical Data

2.1 Performance Data

Model CoolGen 4	13 kW	20 kW	30 kW
Rated voltage	230 V	230 V	230 V
Max. output current	57 A DC	87 A DC	130 A DC
Operating speed range *	2700....3400 U/min **		
Ventilation	Internal ventilator		
Weight	58 kg	87 kg	135 kg
Protection class	IP 55		
Permitted ambient temperature	-25° C.....+50° C non-condensing		
Installation height	< 1000 m NN, above 1000 m output reduction of 1% per 100 m		

CAUTION

The data indicated on the nameplate are of significance!

CAUTION

When the power generator is installed in a casing or under a cover the temperature of the air used for cooling should not be more than 50 °C max. (maximum internal temperature of the casing / cover!)

* guaranteed performance data at 100 % duty factor
** in the range of 2350 rpm to 2700 rpm, limited operation at reduced output voltage is possible.

2.2 Accessories

2.2.1 MFD display

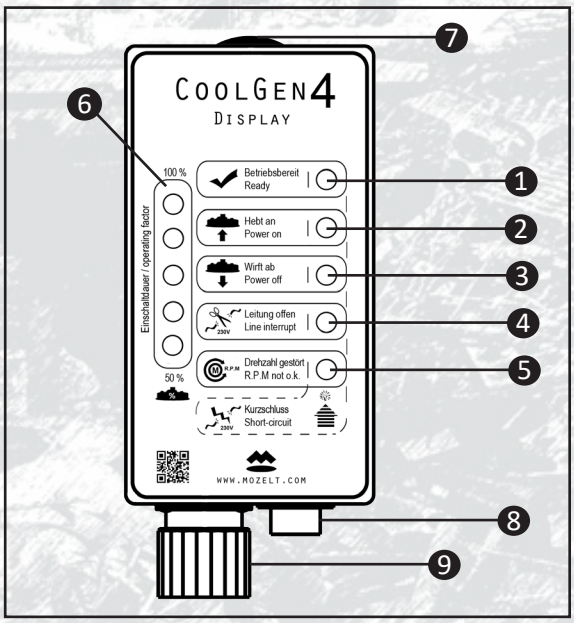

Fig.: 1 | General view CG4 Display

The most important operating states can be immediately read off:

- 1 - 5 Function and fault indication
- 6 Relative duty factor of the magnetic disks in %
- 7 Cover USB connection (servicing purposes)
- 8 Screw terminal for switch line / pushbutton
- 9 Connection for control line

The different operating conditions of the generator are indicated in the function display (MFD) via LEDs.

An additional 6 LEDs indicate the working loading utilization of the magnet (On/Off ratio) within the range 50...100%.

The release switch to turn the magnet on/off is also attached to this display unit.

English

2.3 Generator Drives

Depending on the type of mobile excavator, the power generator is mechanically or hydraulically driven.
Both variants are designed so that the necessary operating speed of the power generator is ensured as soon as the diesel engine has reached its full speed.

2.3.1 Belt Drives

To ensure that the belt runs straight both axes must be flush with each other. The shaft axes shall be parallel with the axis of the generator.
It is recommended to use a Laser alignment device for aligning the belt pulleys.

For adjustment of the pretension, we recommend the use of belt measuring devices. During and after installation, the belt is to be revolved several times. This causes uniform settling of the pulley.
The first check of the run-in belt pulley is carried out after 0.5 to 4 hours.
The belt tension should be checked every 6 to 12 months and, if necessary, corrected.

WARNING **Never operate the power generator without belt guard!**

WARNING **Never reach into the running belt drive!**

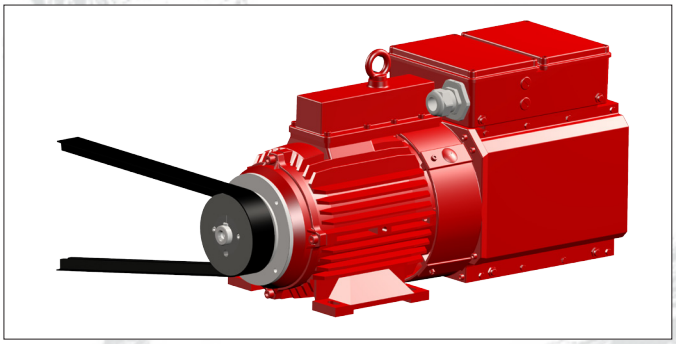

Fig.: 2 | Belt drive

2.3.2 Hydraulic Drives

Hydraulic generator drives are always to be supplied with a priority flow of hydraulic oil.
This means the supply flow should not be adversely affected by motor fluctuations, lifting, travelling or other movements. Depending on the manufacturer of the construction machine, this is implemented in various technical designs. Please ask the respective manufacturer for information on this matter or contact us for the alternative solution of the „HydraBrain“ system.

CAUTION **For hydraulic motor drives, speed peaks up to 4000 rpm are allowed at the moment of shutdown of the magnet, if they do not last longer than 0.5 seconds. At speeds above 3400 rpm and below 2700 rpm, magnet operation is not, or only to a limited extent, possible.**

CAUTION **It is particularly important that the speed remains constant and does not show any fluctuations!**

CAUTION **Speeds above 3400 rpm can destroy the power generator!**

CAUTION **The speed should be measured not only during no-load operation, but also during the starting and shutdown phase!**

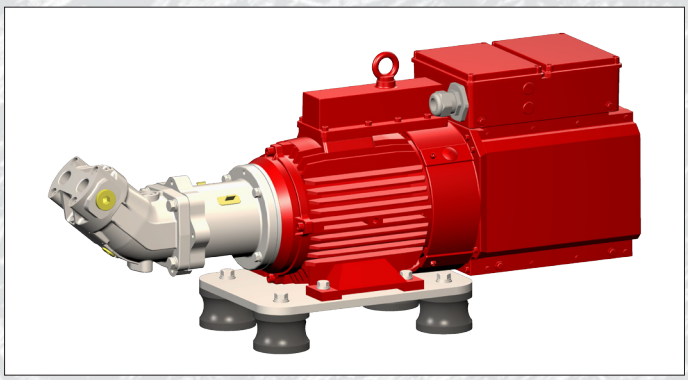

Fig.: 3 | Hydraulic drive with „BELL CLUTCH“ coupling

With some hydraulic drives, optimum operation is also possible at low speed of the diesel engine. For this, please check the manual of the mobile excavator manufacturer.

English

3. Assembling

3.1 Assembling instructions

CAUTION

The environmental atmosphere must be free of aggressive dust, corrosive vapours, gases and liquids. The generator is to be protected against moisture according to IP 55.
Synchronous generators with integrated electronics may not be operated in areas classified as dangerous, unless they are installed and certified in an approved housing.
The generators are designed for foot assembly

Make sure that the heat produced by the generator can be dissipated. The ventilator screen must always be kept free, in order to ensure an adequate supply of fresh air. All heat sources must be considered when determining the ambient temperature, so that the temperature does not rise above the permissible maximum value for the generator.

3.2 Installation of „BELL CLUTCH“ Coupling

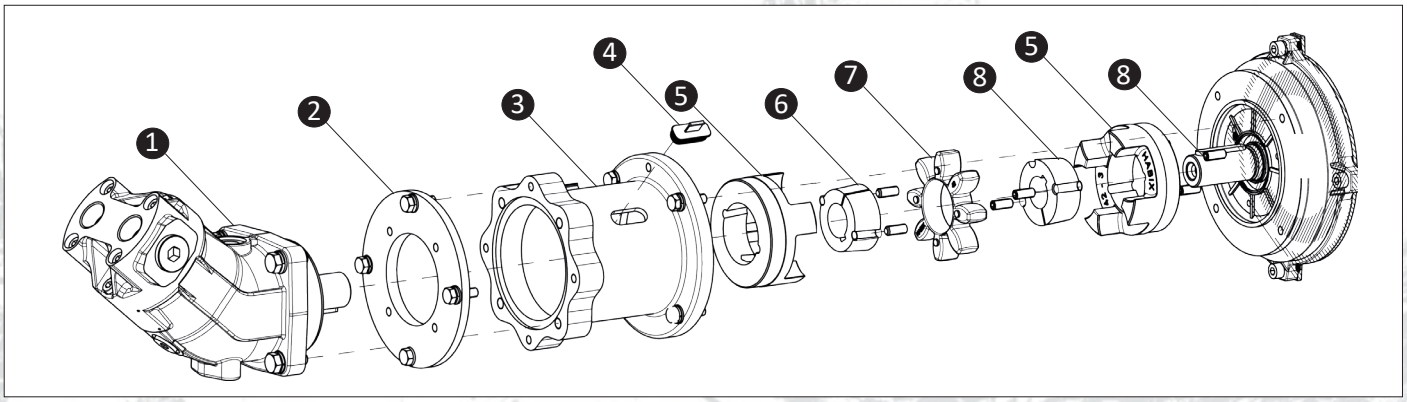

Fig.: 4 | Explosion drawing „BELL CLUTCH“ coupling

1. Hydraulic motor
2. Adaptor ring for 16/17 ccm hydraulic motors
3. Clutch bell
4. Cover for speed measurement
5. Coupling half
6. Clamping bushing on the hydraulic motor
7. Coupling spider
8. Clamping bushing on the power generator
9. Shaft / end shield on the power generator

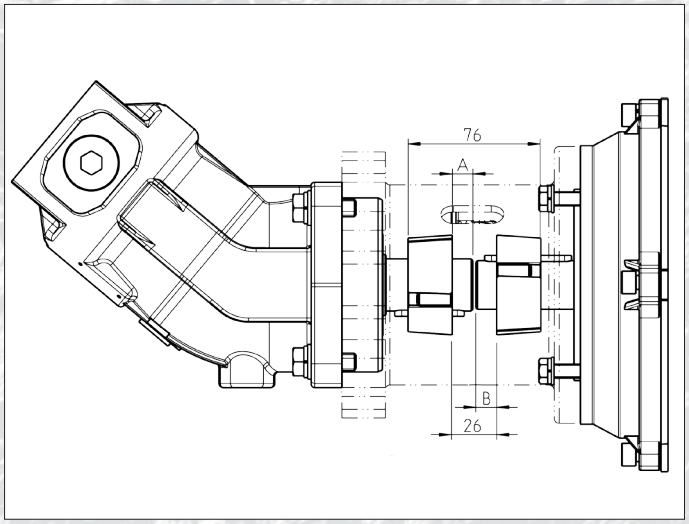

Fig.: 5 | Distance drawing coupling halves

Table of distances coupling halves

Generator type	Hydraulic motor	Distance A	Distance B
T4002 / CG4 13 kW	Bosch-Rexroth 16 ccm / Sunfab 17 ccm	0 mm	0 mm
T4002 / CG4 13 kW	Bosch-Rexroth 23 ccm / Sunfab 25 ccm	12 mm	12 mm
T4002 / CG4 20 kW	Bosch-Rexroth 23 ccm / Sunfab 25 ccm	11 mm	0 mm

English

3.3 EMC Notes Electromagnetic Compatibility

As all electrical equipment, synchronous generators with integral electronics can emit electromagnetic energy and be influenced by it.
Electromagnetic compatibility requires on the one hand that equipment is insusceptible to interference as regards electromagnetic radiation, i.e. that they cannot be influenced, and on the other hand does not exceed a certain level of interference radiation, and as a consequence does not interfere with other equipment.

These levels depend on the environment in which the equipment is operated. Here a distinction is made between industrial and residential environments including business and commercial as well as light-industrial environments.

This chapter is to serve as a guideline for installation of the drives to avoid EMC problems and realize an EMC-compliant wiring in accordance with the EMC Directive.

3.3.1 Interference Immunity

CG4 ... are extremely susceptible to interference as regards electromagnetic radiation.
Interference immunity is achieved for the equipment without additional aids. In addition, all induction components, such as relay and contactor coils, electromagnetic brakes, etc. are to be interference-suppressed using suitable components (e.g. RC elements).

3.3.2 Interference Radiation

To avoid unallowable interference radiation it is absolutely necessary to observe the given wiring instructions.
Non-line-related interference radiation is directly emitted by the integrated electronics and wiring within a frequency range of 30 MHz to 1 GHz. It is mainly generated by the fast logic circuits and has very low energy.
Problems with other electronic equipment due to this are not be expected.

Line-related interference radiation in the frequency range of 150 kHz to 30 MHz is mainly caused by switching of the power semiconductors. Because of the independent network, no problems with other equipment will occur.

3.4 Magnet Connection

The electrical line connections and plug-in connection (plug / coupling) are matched to the corresponding output of the power generators. In the process, the highest requirements are made on functionality and safety.
Please only use original MOZELT spare parts as required.

3.5 LED Functions

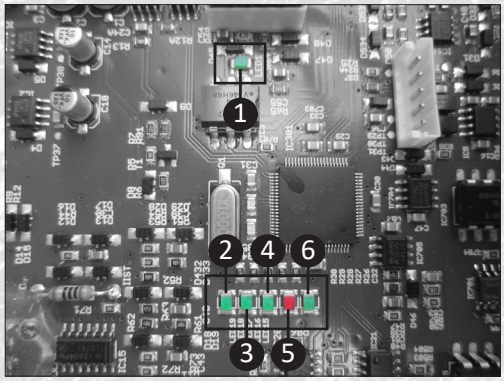

Fig.: 6 | LED functions on the control card

Various operating states are in addition indicated on the control card of the power generator via LED. The following operating states can be read off via the LED:

1. Ext. pushbutton input LED → Status external pushbutton input via terminal block
2. Signal output LED → Selection signal output
3. Status LED → Status „On“
4. Supply voltage LED → Internal electronics supply voltage available
5. Fault LED → LED signals a fault
6. Stand-by LED → Stand-by LED

3.6 Control cable

Cable for control signals must be shielded. The cable shield must be connected to the connector shell.
The signal ground must not be grounded.
If necessary, please use only original spare parts.

3.7 Terminal Box

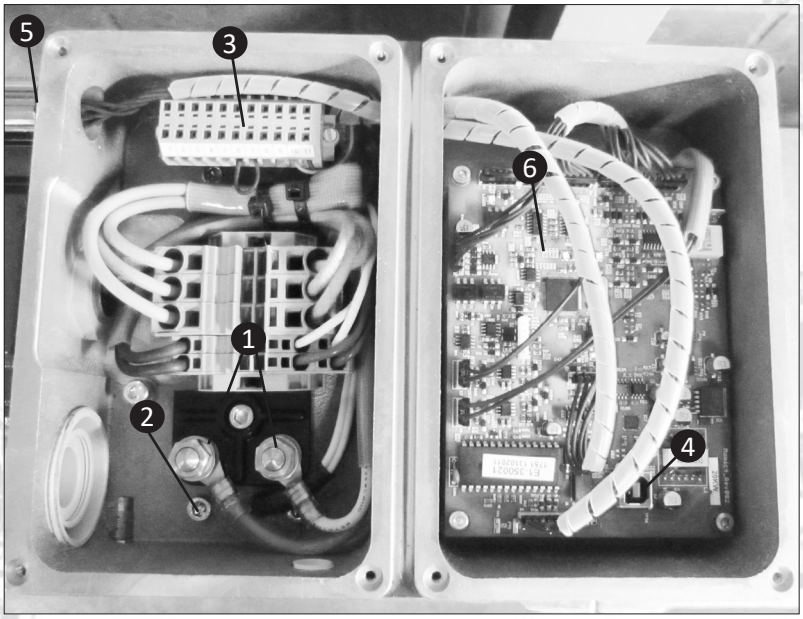

Fig.: 7 | Terminal box

1. Magnet connection 230 V DC
2. Protective earth conductor connection
3. Terminal block
4. USB connection
5. Screw terminal control line
6. Control card

Before isolation of power generator and electronics, the following warning should be observed:

WARNING

**In the electronics, there are intermediate circuit capacitors.
Their discharge may take longer than 10 minutes!
Before start of work, verify isolation from power supply!
If this is not observed, serious personal injuries with fatal result, severe injuries to health or considerable damage to property cannot be ruled out!**

The discharge time begins after final shutdown of the power generator!

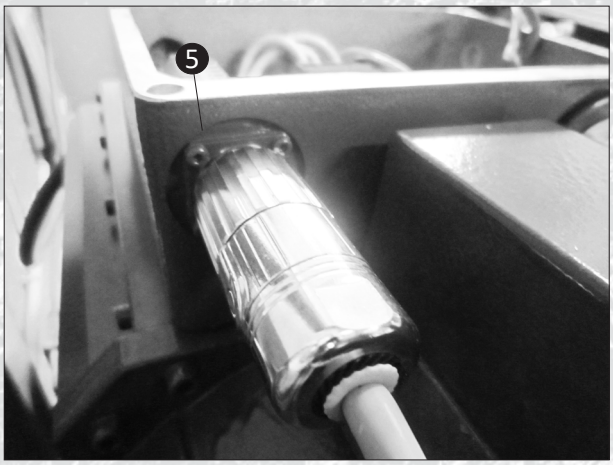

Fig.: 8 | Connection control line on the power generator

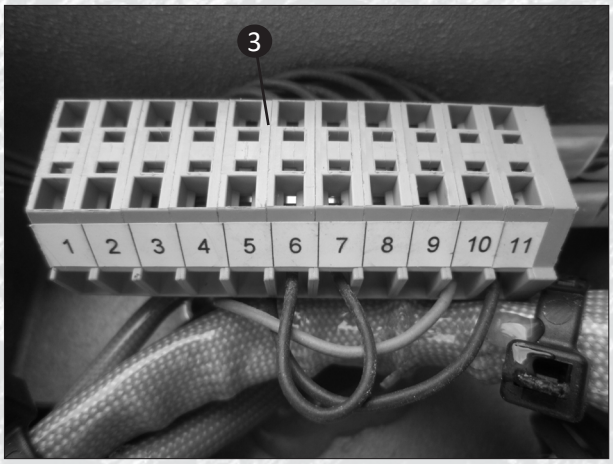

Fig.: 9 | Terminal block

English

3.8 Terminal Block

Wiring of the hydraulic and temperature sensor terminals is always arranged in the same way. Due to the various switch wirings there are the following possibilities:

3.8.1 Start command via switch line on the MFD display

During run-up of the power generator, the electronics detects a signal at terminal 7.
Thus, the display pushbutton on the MFD is activated and the pushbutton input at terminals 5 & 9 is deactivated.

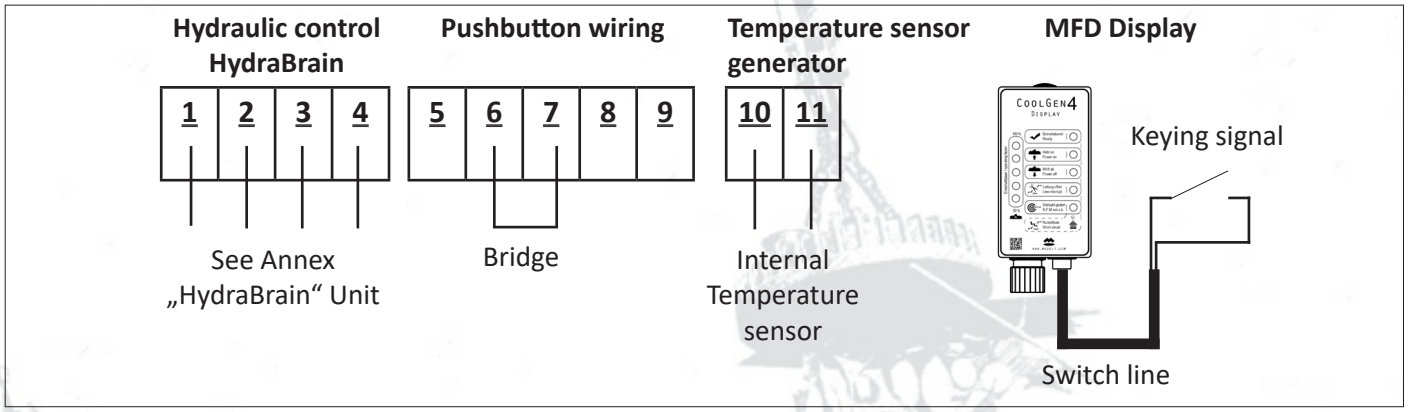

Fig.: 10 | Terminal allocation on the terminal block (pushbutton on MFD activated)

3.8.2 Start Command via Terminal Block

During run-up of the power generator, the electronics detects the missing signal at terminal 7.
Thus, the display pushbutton is deactivated and the pushbutton input on terminals 5 & 9 activated.

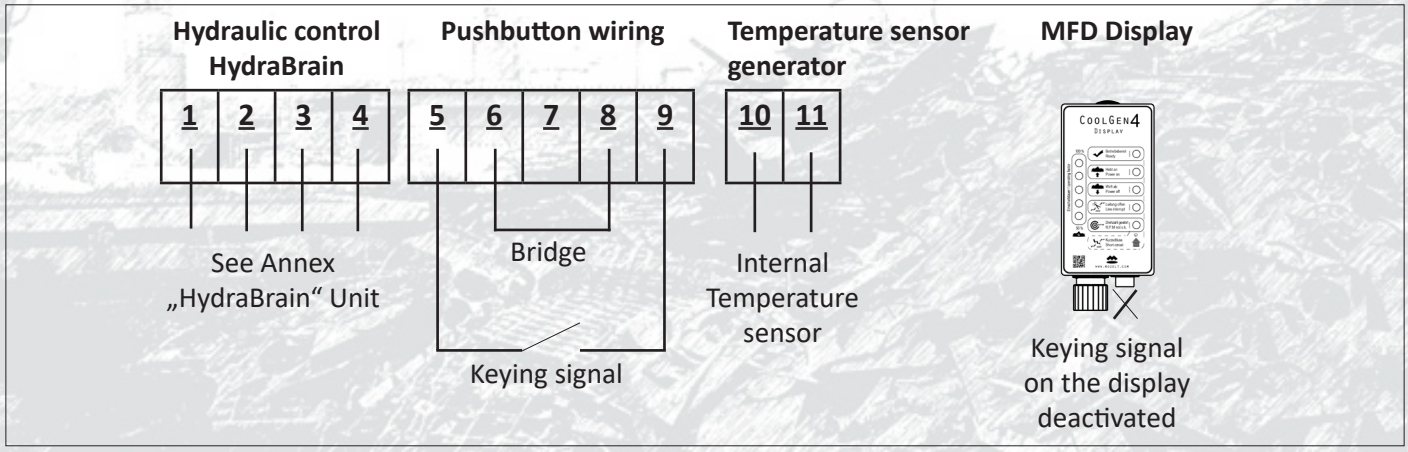

Fig.: 11 | Terminal allocation on terminal block (pushbutton on terminal block activated)

3.9 USB Connection

On the control card and MFD, there is an USB port. Both USB connections are identical and allow the following functions via the DriveSoft service software (see Annex DriveSoft):

- Changing of the output voltage
- Changing of the ramps of the lifting and detachment behaviour of the magnet
- Adjustments for sorting operation
- Fault analysis
- Operating states (speed, temperature, operating hours, output voltage, etc.)
- Oscilloscope function
- Firmware updates

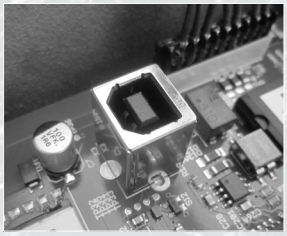

Fig.: 12 | USB connection on the control card

3.10 Cable Allocation 230 Volt

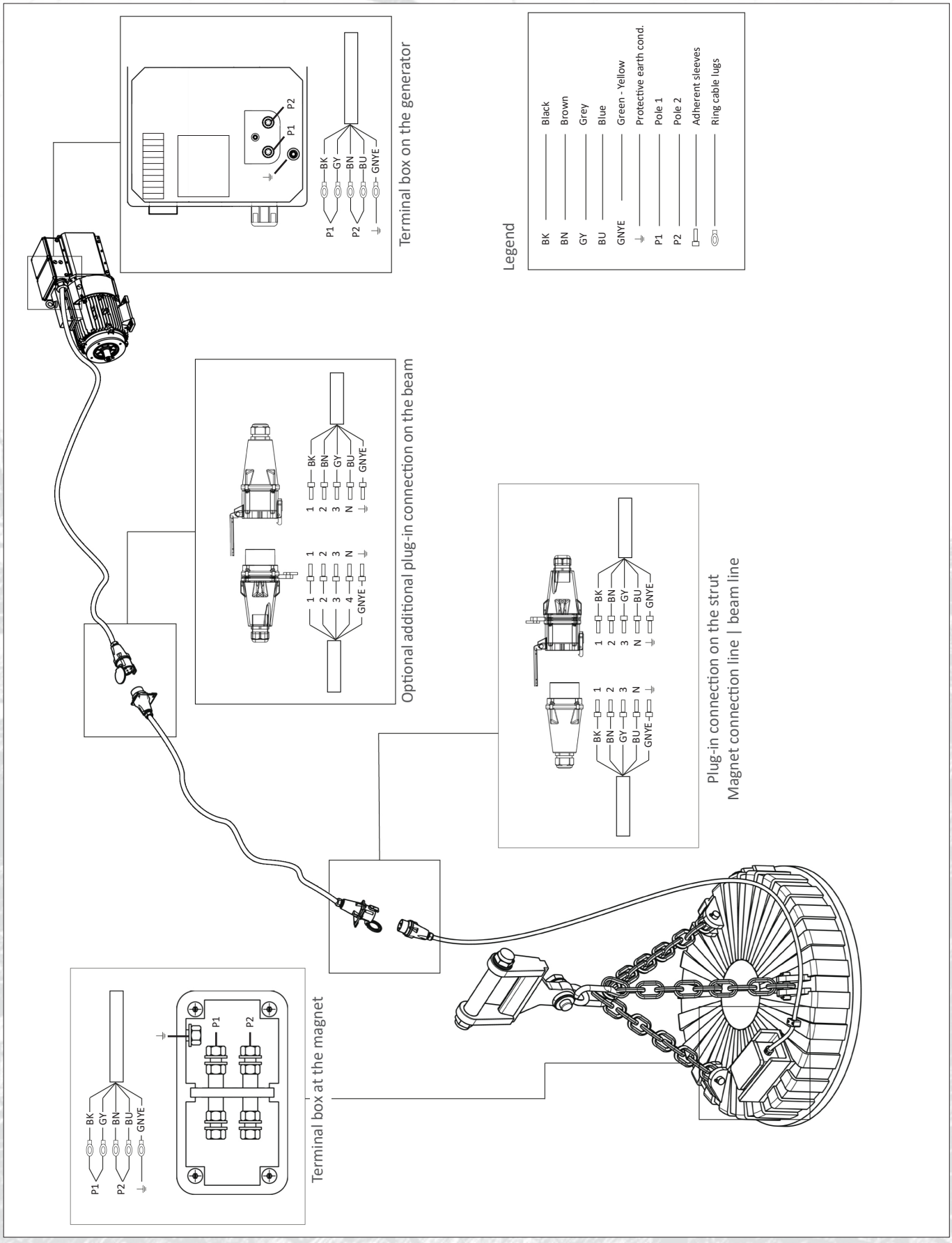

Fig.: 13 | Cable allocation magnet system wiring system 230 V

English

3.11 Dimensional Drawings Power Generator

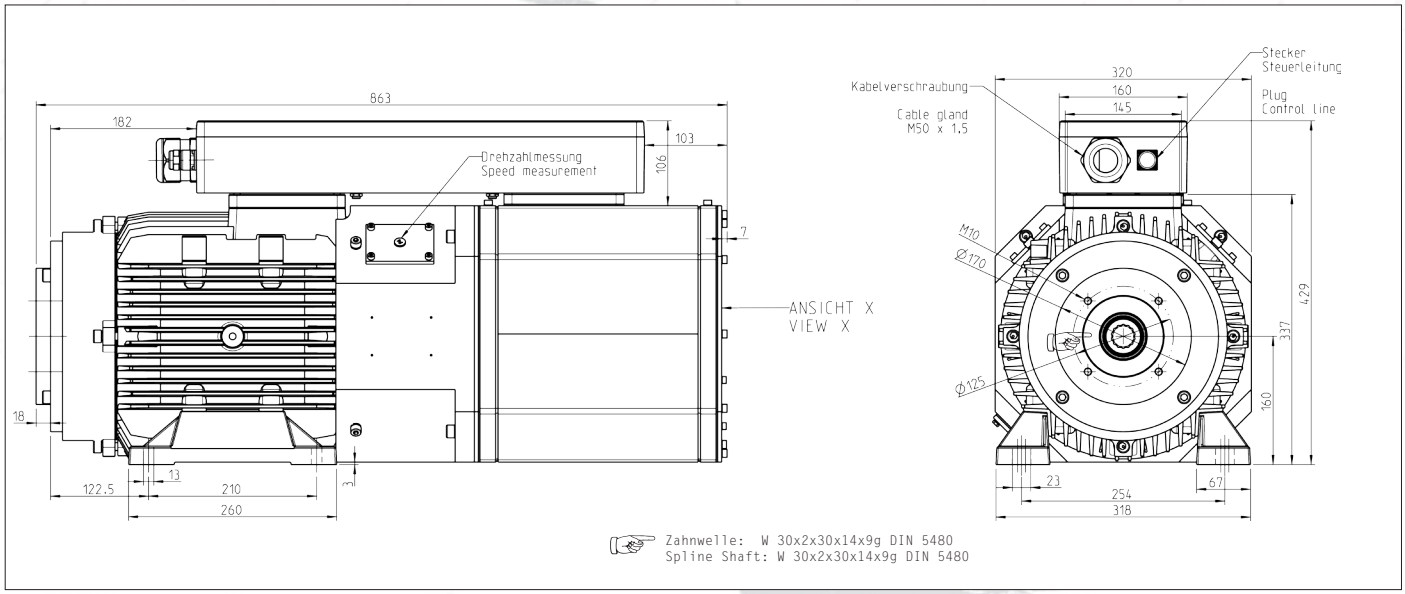

Fig.: 14 | Power generator CG4 30 kW

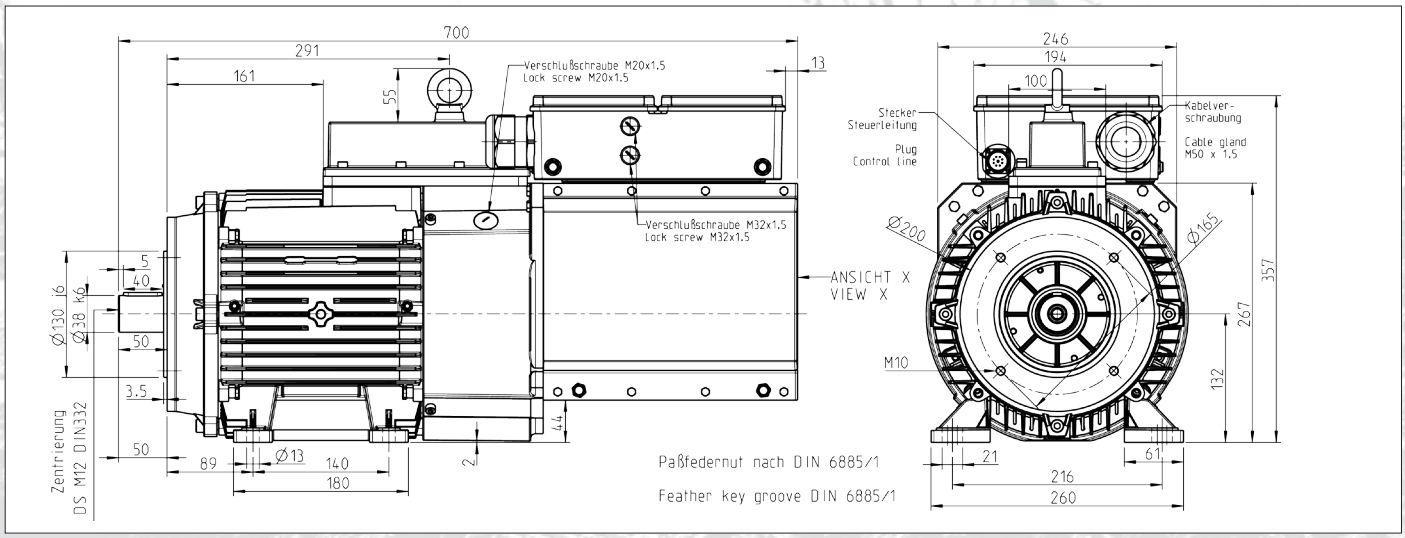

Fig.: 15 | Power generator CG4 20 kW

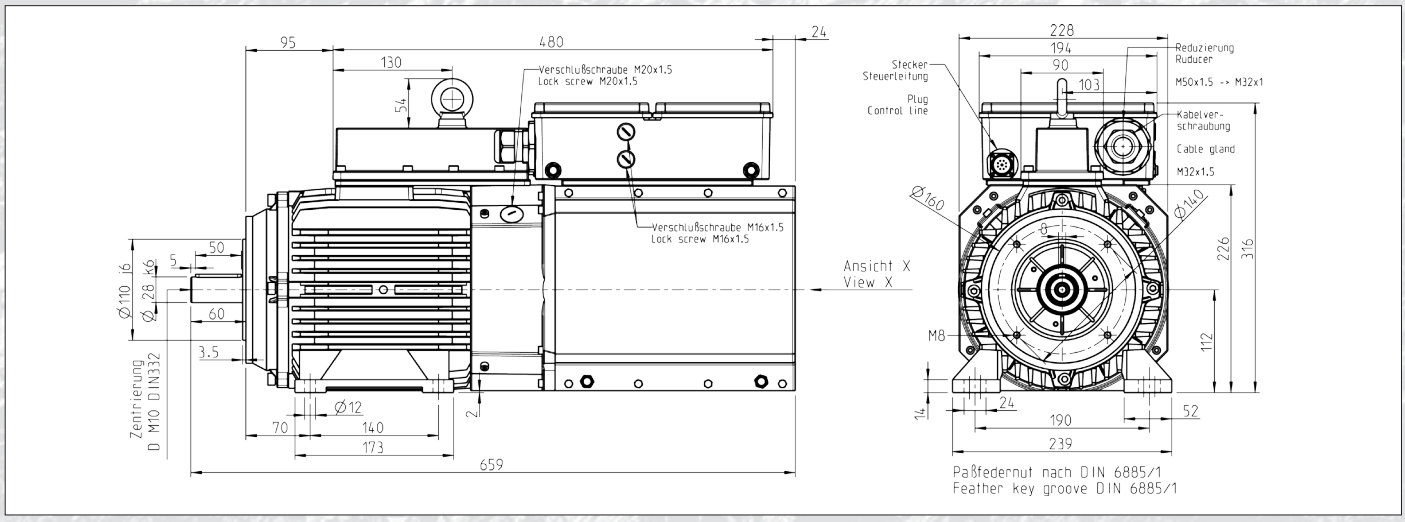

Fig.: 16 | Power generator CG4 13 kW

English

4. Commissioning

The generator's internal electronic unit has been completely balanced at the works and does not require any further adjustments and checks. Only the „MFD" display is to be connected with the generator system via a 9-pole cable, double-ended plug connection.
To this display unit the release pushbutton is connected via the 3-pole plug. The magnet is connected via two clamping bolts. Operation is possible in both directions of rotation without rewiring.

4.1 Safety Notes

It is required that the user has familiarized himself with the operating instructions before commissioning of the power generator.

During operation of this power generator, dangerous voltage may occur which can cause death or severe bodily injuries! Utmost care is advised during work on the power generator.

It is absolutely necessary to observe the following warning notes:

- **Only qualified maintenance and repair personnel are permitted to examine and repair the unit or parts of it.**
- **Never leave open or open terminal connection spaces, covers and 230-volt plug-and-socket devices on the power generator and magnet with the drive motor in operation!**
- **Stand on an isolating mat (suitable for electrostatically sensitive devices) and make sure that this mat is not earthed before performing commissioning work on the switch-on unit.**

Before start of work, verify isolation from power supply. Make sure that no voltage is applied to the magnet connection. If this note is not observed, severe or even fatal bodily injuries may be caused!

- **When working on the connected machine or supply leads to the machine, the power generator should be shut down and locked out in Off position.**
- **According to VDE 1060, safety isolation by locking the release pushbutton is not allowed.**
- **A safety isolation blocks the power modules in the case of faults. However, with this function it cannot be ensured that there is no residual voltage at the output terminals and inside the power generator. After opening of the power generator, the remaining residual voltage should be measured at the usually live parts. Before touching electrical contacts make sure that no voltage is applied to voltage-carrying parts.**
- **Do not use any measuring equipment of which you know that it is in damaged or defective condition.**

Important!
In case of fault, modules potential-free during operation may carry voltage. Before start of work on the equipment, make sure by measurement after safety isolation that the equipment is deenergized. If this note is not observed severe or even fatal injuries may be caused.

Before start-up, subject the complete system to a visual inspection!

Before start-up, check correct seating of the V-belts!

Connect only lifting magnets to the system! For other electrical consumers, operation is not allowed!

Before start of all work on the entire system, shut down the drive motor!

Make sure that ...

- **the person supervising the trial run is qualified and competent to carry out, and supervise, the mechanical and electrical installation.**
- **the nominal values of the power generator correspond to the operating conditions.**
- **the power generator is securely fixed.**
- **the power generator is adequately ventilated.**

Safety measures shall be properly adhered to!

4.2 Operating instructions

When working with the load lifting magnet, the pertinent industrial safety and accident prevention regulations are to be observed.

In addition, lifting magnet operation may only be started, if the operator knows the „Safety Regulations Magnet Operation“ (see Table of Contents).

Before start-up of the power supply CG 4, the operator should ensure that the 230V cable system is in an optically perfect condition. Plugs and plug connectors are to be examined for tightness of fit, the anchoring device of the magnet connecting cable is to be examined for perfect function.

The V-belt tension with belt drives is to be examined and, if necessary, the belts are to be retightened according to regulation.

Unless otherwise expressly stated, the diesel engine of the mobile excavator is to be brought up to full revolutions. The generator then runs within its operating range. The yellow LED „Ready“ automatically appears on the multi-function display MFD in the operator‘s cab.

Switching the power supply and/or the load lifting magnet on and off is usually accomplished with a switch located in the handle. Depending on the type of device, this must be energized with a separate switch in the control console of the mobile excavator. For this purpose also see the notes in the manual for the mobile excavator.

If the switching-on command is given, then the generator CG 4 connects the voltage contactless through to the load lifting magnet. If the command is given to switch off, then the generator automatically leads to its demagnetization. During the process of demagnetizing, whereby the magnet releases its load (approx. 1 sec), no renewed switching-on command can be given.
Switching-on of the installation is only possible, if a load lifting magnet is attached to the system.

Switching on the magnet:

Operate the button in the control lever 1 x.
In addition to the yellow LED „Ready“, the green LED „Power on“ lights up in the multi-function display.

Switching off the magnet:

Operate the same button in the control lever again only 1 x. The already illuminated green LED „Power on“ now goes out and a red LED with „Power off“ lights up.
After the load has been dropped, this goes out automatically. The permanently illuminated LED „Ready“ during the shifting processes indicates that a renewed procedure is now possible and that the power can be switched on. Breakdowns are indicated by illuminated red LEDs.
The meaning and elimination of such disturbances are explained using figurative illustrations and texts under - Breakdown indicators on the MFD -.

4.3 Operational indicators MFD

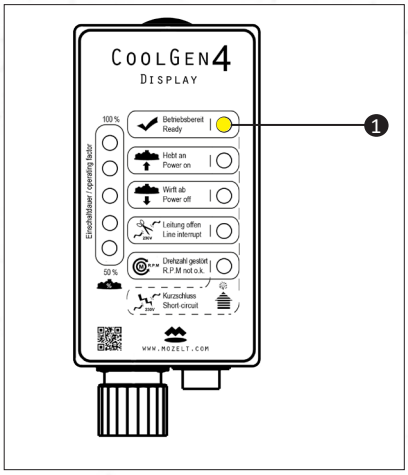

Fig.: 17 | MFD signals Ready for operation

Generator running in the working range

Indication:	- LED 1 (yellow), „Ready“
Note:	Generator is waiting for switching-on command.

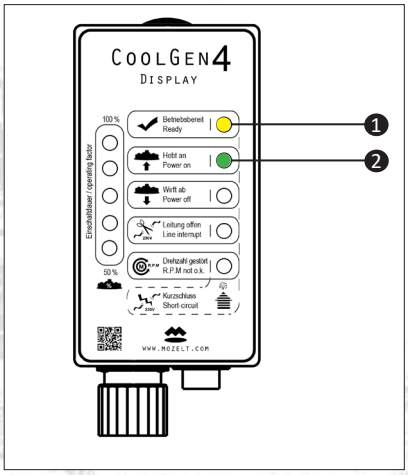

Fig.: 18 | MFD signals an activated magnet

After switching-on command given via operating switch, the magnet lifts

Indication:	- LED 1 (yellow), „Ready“ - LED 2 (green), „Power on“
Note:	Magnet lifting material.

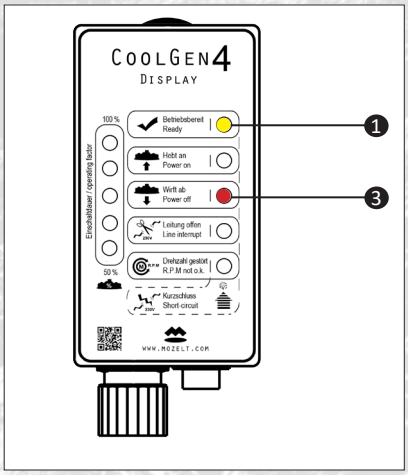

Fig.: 19 | MFD signals throwing-off of the material

After switching-off command given via operating switch, magnet releases load

Indication:	- LED 1 (yellow), „Ready“ - LED 3 (red), „Power off“
Note:	Magnet releases the material.

English

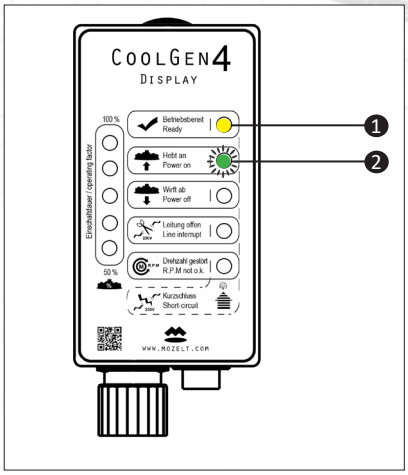

Fig.: 20 | MFD signals an activated magnet in the sorting mode

After the start command has been given via the operating pushbutton, the magnet lifts

Indication:	- LED 1 (yellow) „Ready“, - LED 2 (green, flashing) „Power on“.
Note:	- Magnet lifts material. The power generator operates in the sorting mode .

English

4.4 Fault indicators MFD

Faults are often indicated by red LED.

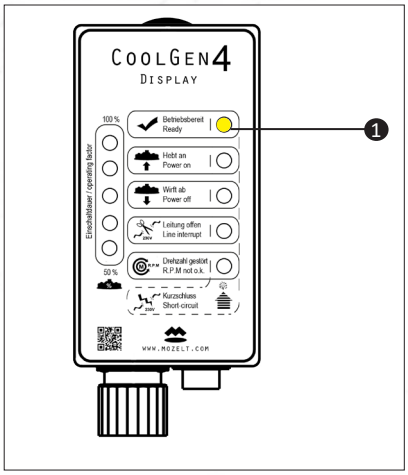

Fig.: 21 | Starting command does not respond

After switching-on command given via operating switch, no function

Indication:	LED 1 (yellow), „Ready“.
Possible cause :	- Interruption in switch cable - Operating switch defective - Control cable defective

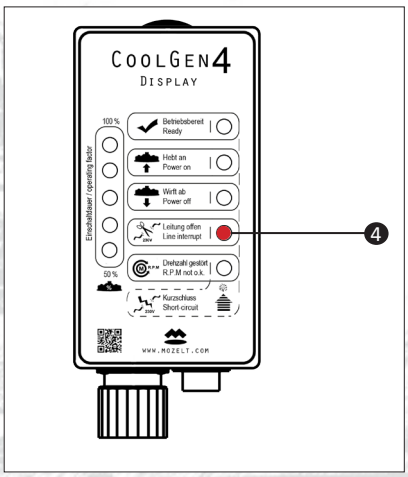

Fig.: 22 | MFD signals „Line interrupt“

After giving the start command via the operating pushbutton, „line interrupt“ is displayed

Indication:	LED 4 (red), „Line interrupt“.
Possible cause:	- Line interruption in the 230V circuit - Magnet not, or incorrectly, connected - Magnet, line or plug-and-socket device defective
Note:	The power generator is to be immediately shut down until the fault has been corrected. The fault indication can only be cancelled by shutdown of the power generator.

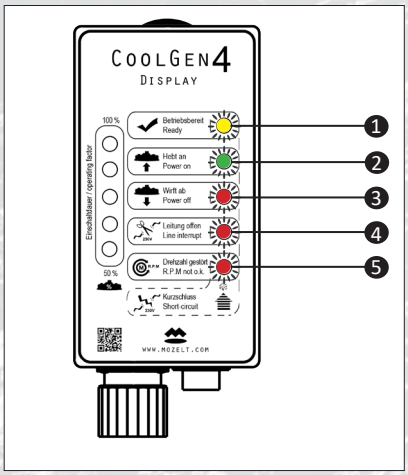

Fig.: 23 | MFD signals short circuit

After giving the shutdown command via the operating pushbutton LEDs 1 to 5 are flashing

Indication:	LED 1 -5 (flashing).
Possible cause:	- Short circuit in the 230V wiring system - Full earth fault of the magnet - Magnet too much power for the power supply
Note:	The power generator is to be immediately shut down until the fault has been corrected. The fault indication can only be cancelled by shutdown of the power generator

English

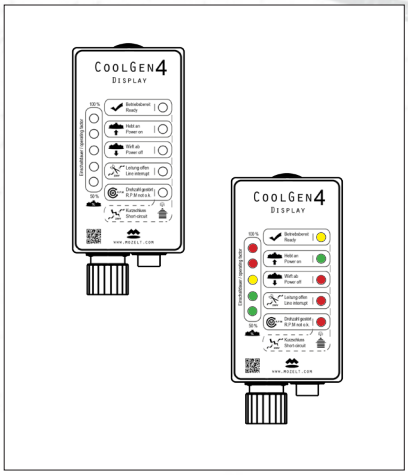

Fig.: 24 | MFD has no function / all LED light up

Generator runs within its working range, however, no function is recognizable or all LED light up

Indication:	No LED indicator recognizable, possibly also all LED lights up.
Possible cause:	- Cable damage / power breakdown in the control cable.

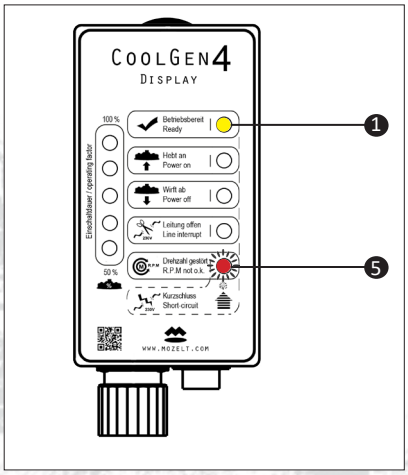

Fig.: 25 | MFD signals „R.P.M not o.k.“

The display „R.P.M not o.k.“ flashes and the indication „Ready“ is on

Indication:	LED 1 (yellow), „Ready“, LED 5 (red, flashing), „R.P.M not o.k.“.
Possible cause:	The power generator runs at overspeed.
WARNING	**Shut down motor immediately and have the speed checked to prevent damage to the power generator!**

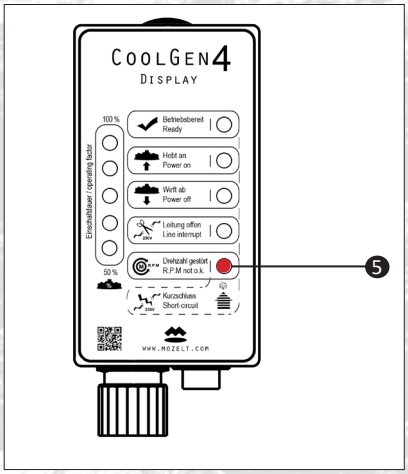

Fig.: 26 |MFD signals underspeed

The display „R.P.M not o.k.“ lights up

Indication:	only LED 5 (red), „R.P.M not o.k.“, possibly also flashing.
Possible cause:	The power generator runs at underspeed. **Have the speed checked!**
Note:	LED 5 (steady light), speed of 1650 - 2000 rpm LED 5 (flashing), speed of 2000 - 2350 rpm

English

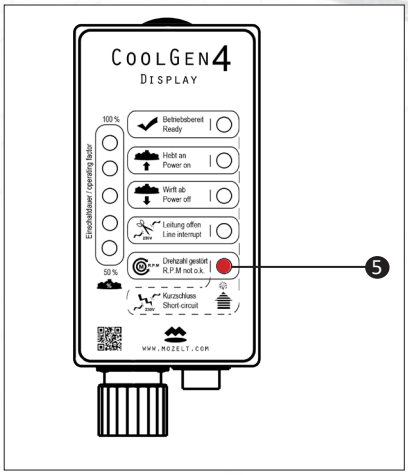

Fig.: 27 | MFD signals shutdown due to overspeed

The display „R.P.M not o.k.“ lights up

Indication:	Only LED 5 (red), „R.P.M not o.k.“
Possible cause:	If the power generator runs for several seconds at a speed in the overspeed range, it is shut down. Switching-off can only be cancelled by shutdown of the power generator.
WARNING	**Shut down the motor immediately and have the speed checked to avoid damage to the power generator!**

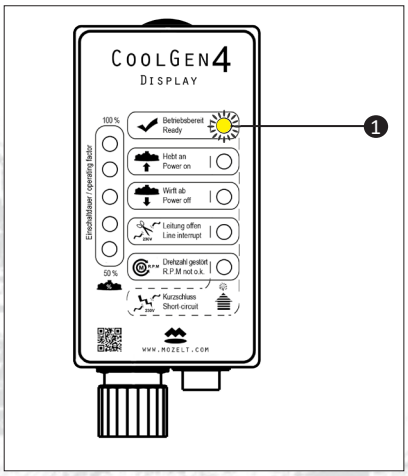

Fig.: 28 | MFD signals overtemperature

The display „Ready“ flashes

Anzeige:	LED 1 (yellow, flashing), „Ready“.
Possible cause:	Power generator overheated and cannot be started. The power generator operates at an unallowable ambient temperature. The fresh air supply to the power generator is not sufficient.
Note:	The power generator is again ready for operation as soon as the normal temperate has been reached again.

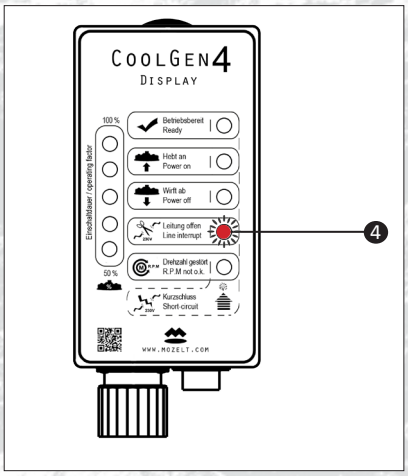

Fig.: 29 | MFD signals insulation fault

The display „Line open“ flashes

Indication:	LED 4 (red, flashing), „Line open“.
Possible cause:	- The magnet has an insulation fault.
Note:	The power generator is to be immediately shut down until the insulation fault has been corrected. The fault indication can only be cancelled by shutdown of the power generator.

English

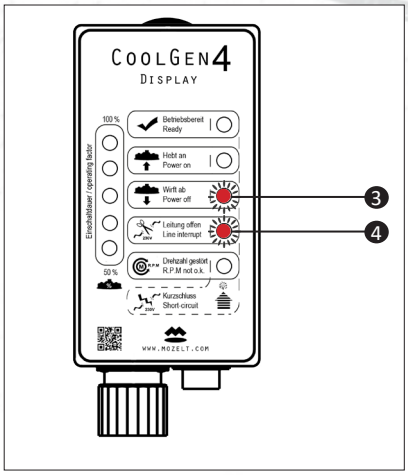

Fig.: 30 | MFD signals increased intermediate circuit voltage

After the start/stop command has been given LEDs 3 & 4 flash

Anzeige:	- LED 3 (red, flashing), „Power off“ - LED 4 (red, flashing), „Line open“
Possible cause:	Due to speed fluctuations, the internal intermediate circuit voltage rises above the allowable value.
Note :	The power generator is to be immediately shut down until the fault has been corrected. Contact the MOZELT Service Department immediately. The fault indication can only be cancelled by shutdown of the power generator.

English

4.5 Assembly Plan Power Generator

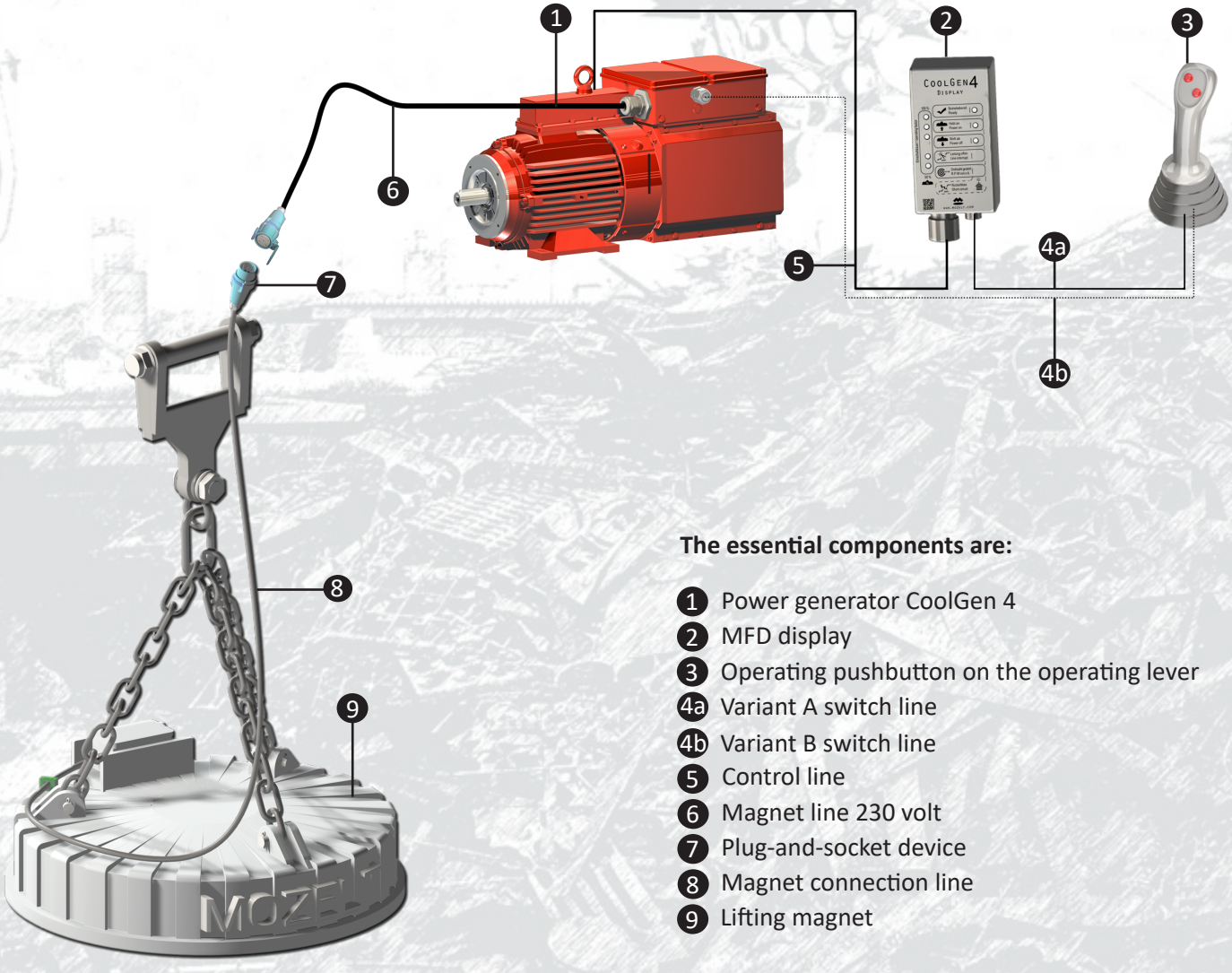

The essential components are:

1. Power generator CoolGen 4
2. MFD display
3. Operating pushbutton on the operating lever
4a. Variant A switch line
4b. Variant B switch line
5. Control line
6. Magnet line 230 volt
7. Plug-and-socket device
8. Magnet connection line
9. Lifting magnet

Fig.: 31 | General view arrangement power supply system CG 4

4.6 Mechanical Speed Measurement

While the „BELL CLUTCH“ coupling bells for power generators with a rating of 13 kW and 20 kW are provided with recesses for mechanical speed measurement, the hydraulic motor with splined shaft is directly flanged to the power generator for ratings of 30 kw.

For this purpose, one service flap each is arranged on the left and right side of the 30kw CG4 power generator.

After loosening the four cheese head screws, the service flap can be removed. Beneath it, there is the fan blade to which a reflection strip for mechanical speed measurement can be attached.

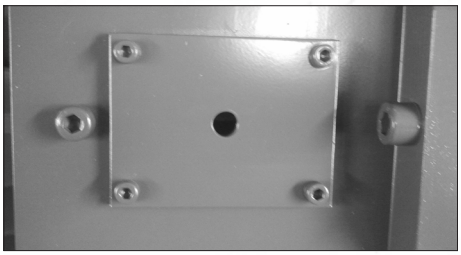

Fig.: 32 | Service flap for speed measurement

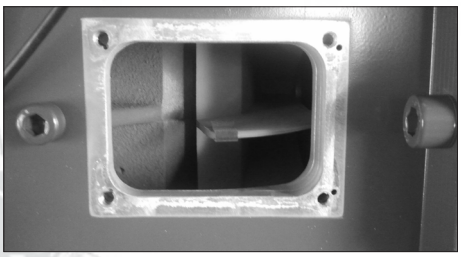

Fig.: 33 | Access to the fan blade

WARNING

When working on the fan blade, shut down the drive and secure it against switching-on!

WARNING

Never reach into the running fan blade or insert measuring devices/objects! Measurement is carried out at a safe distance from the fan blade.

5. Shutdown

WARNING

Equipment to be scrapped has to be deposed of in accordance with the legal and, if required, local regulations. The electronic components integrated in synchronous generators may contain pollutants and toxins and are to be deposed of as electronic scrap (under certain circumstance health hazard)!

WARNING

**In the electronics, there are intermediate circuit capacitors.
Their discharge may take longer than 10 minutes!
Before start of work, verify isolation from power supply!
If this is not observed, serious personal injuries with fatal result, severe injuries to health or considerable damage to property cannot be ruled out!**

English